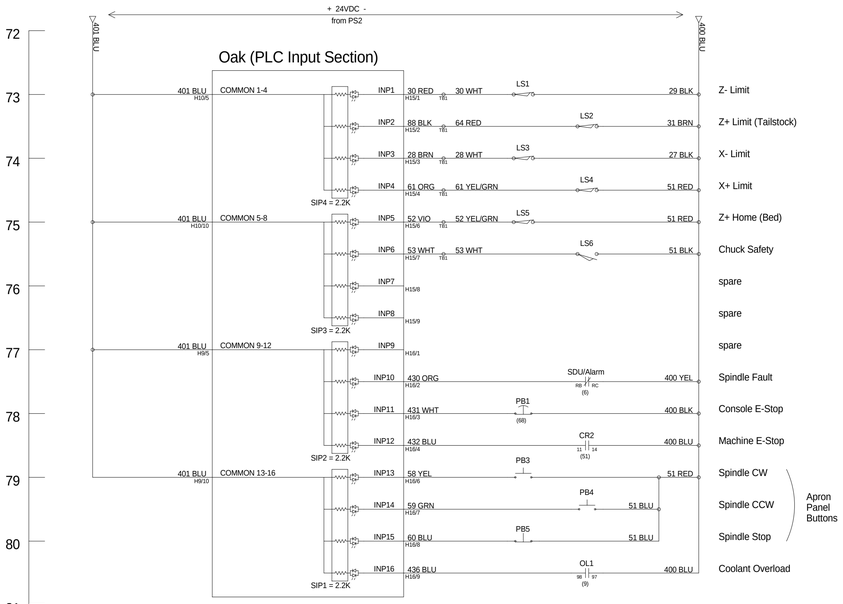

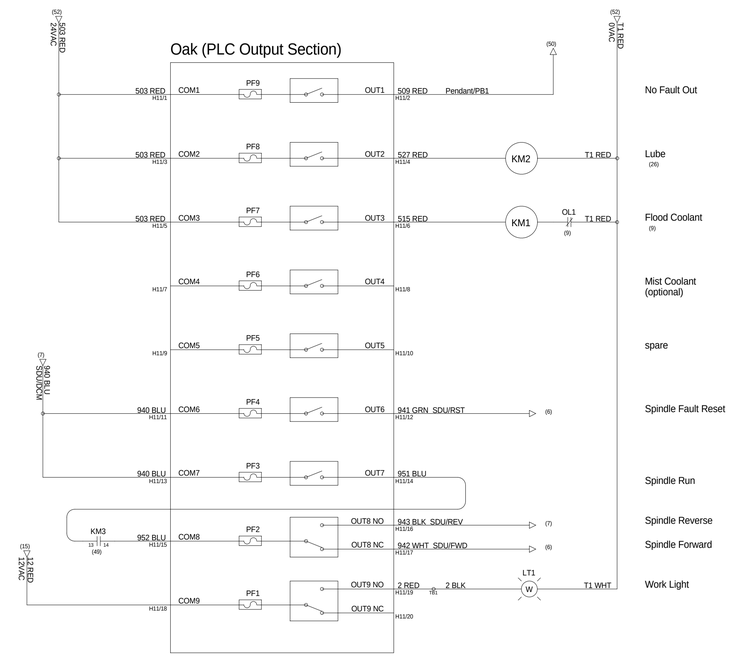

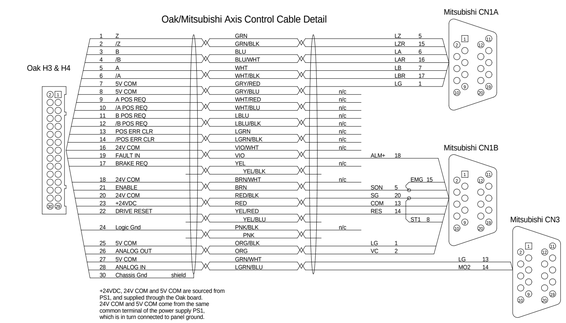

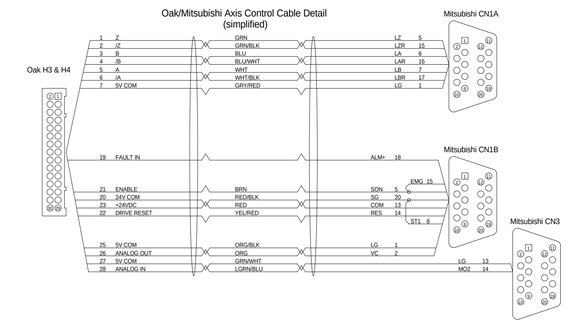

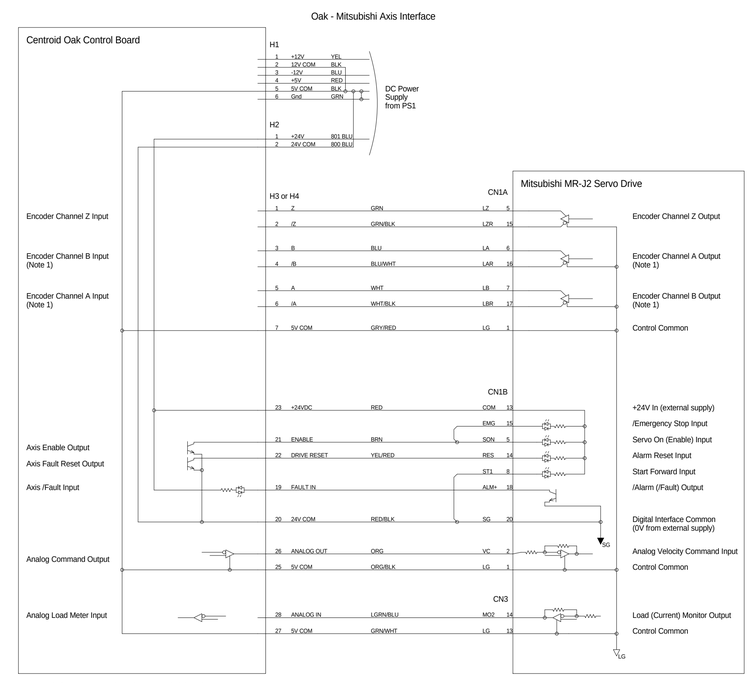

MACHINE: Chevalier FCL-1840A Lathe with Centroid T400		
DRAWN BY: Marc Leonard	REV: 1	DATE: 23-Aug-2016
SCALE: none	SHEET: 2 OF 2	FILE: K102381_2.VCD